Holzumrandung Zeder
Montageanleitung

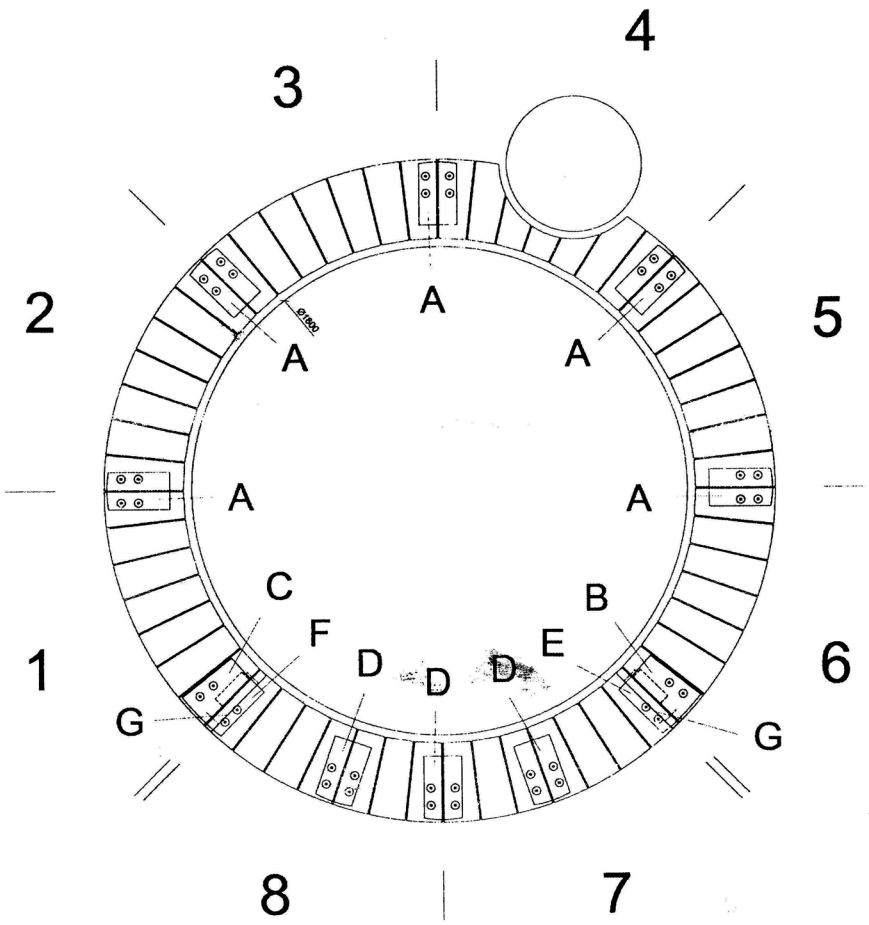

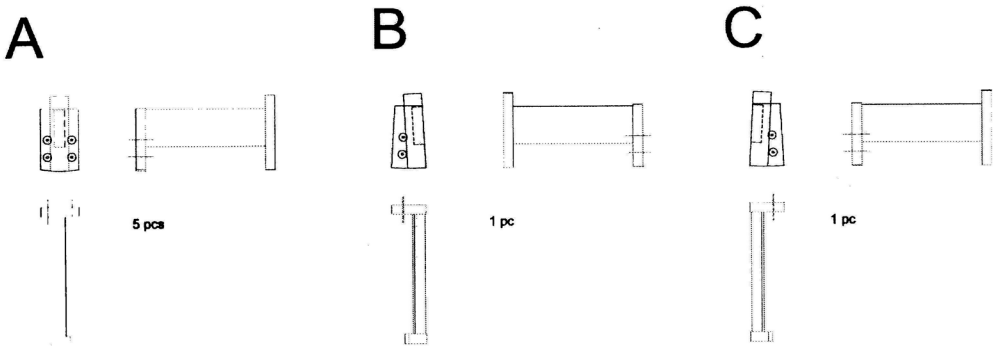

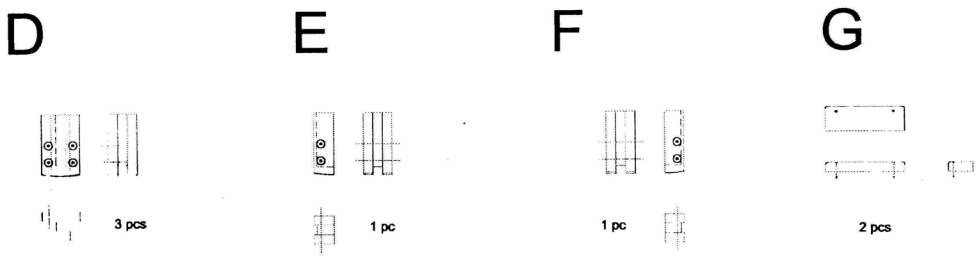

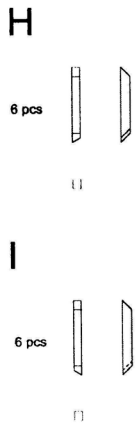

CONSTRUCTION SCHEME

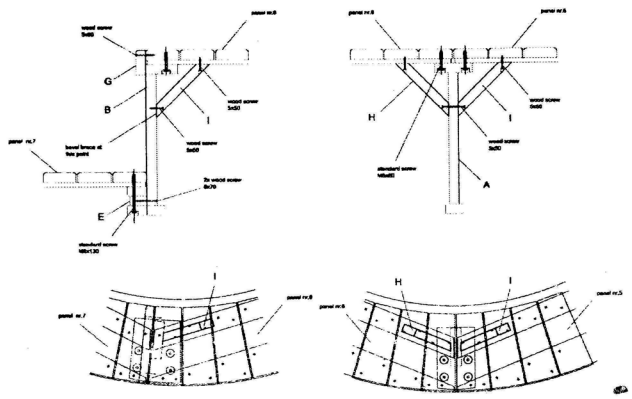

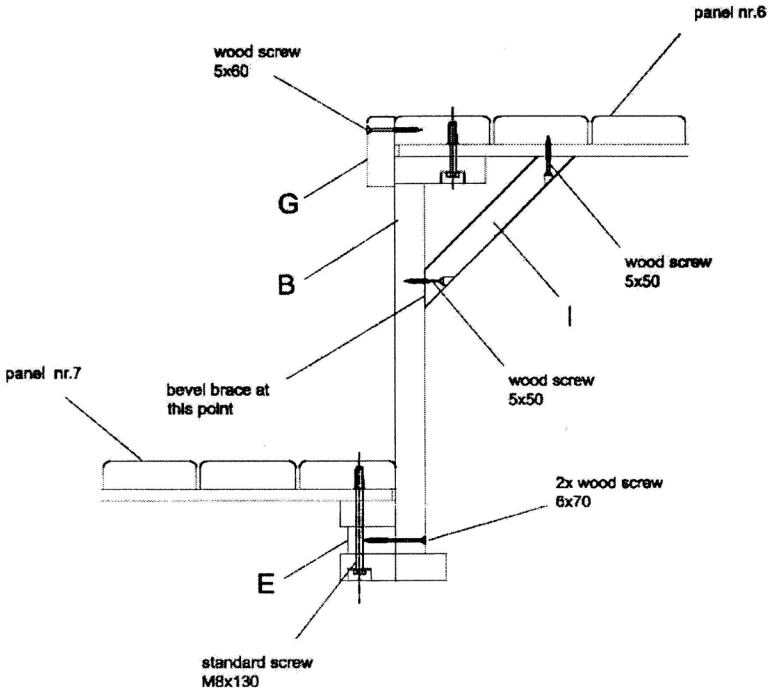
panel nr.6
wood screw
5x60
G
B
wood screw
5x50
I
panel nr.7
bevel brace at
this point
wood screw
5x50
2x wood screw
6x70
E
standard screw
M8x130

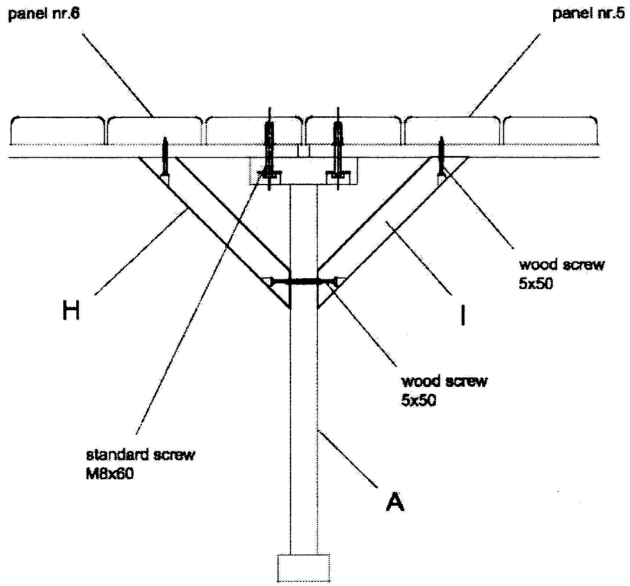
panel nr.6
panel nr.5
H
wood screw
5x50
I
wood screw
5x50
standard screw
M8x60
A

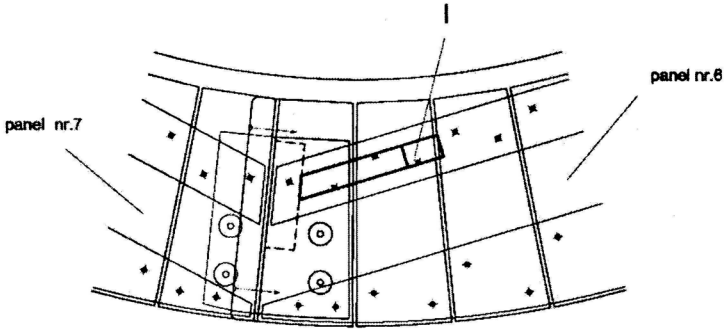
I
panel nr.6
panel nr.7

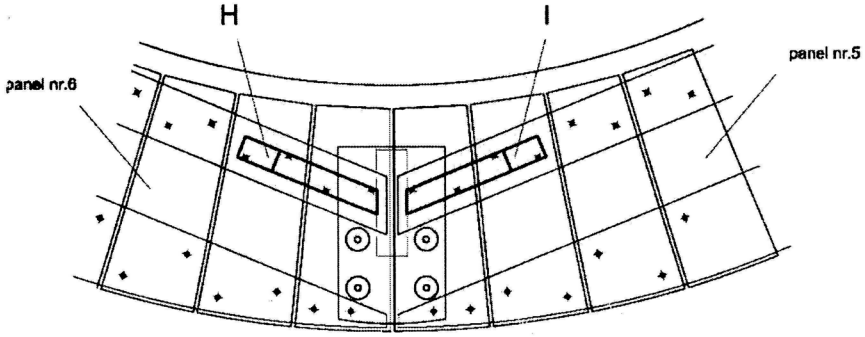
H
I
panel nr.5
panel nr.6